24007

B.Tech. 2nd Semester F Scheme

Examination, May–2014

ELECTRICAL TECHNOLOGY

Paper–EE-101-F

Common for all branches

Time allowed : 3 hours] *[Maximum marks : 100*

Note : *(i)* ***Section-A (Q. No. 1) is compulsory.***

*(ii) Attempt any **four** questions from **section-B, C, D** and **E** by selecting at least **one** question from each section.*

*(iii) Students have to attempt total **five** questions and use of nonprogrammable calculator is allowed.*

Section–A

1. (a) Derive the equation for average power consumed by inductive circuit in AC system. 5

(b) Write short note on Millman's theorem. 5

(c) What do you mean by self induced e.m.f ? Explain its types. 5

(d) What is the difference between absolute and secondary instruments ? 5

https://www.mdupapers.com
https://www
http://www.haryanapapers.com

Section–B

2. State and explain Superposition theorem. Find the value of potential across 4 ohm resistance in the given network. 20

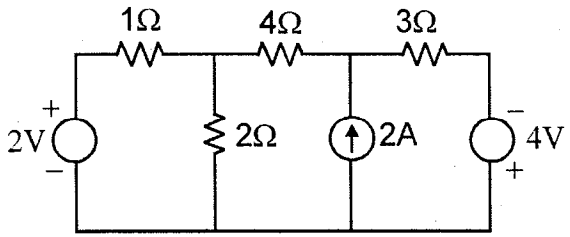

3. Derive the equation for star delta transformation. Find the value of current flowing through 2 ohm current in the given network by using star delta transformation. 20

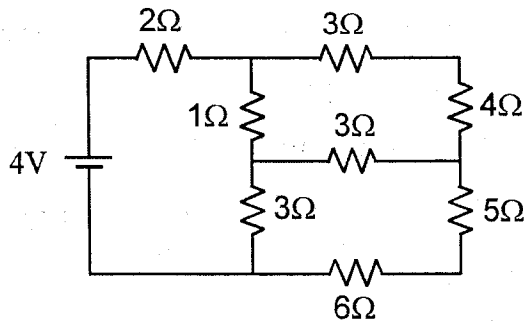

http://www.haryanapapers.com

https://www.mdupapers.com
https://www

Section–C

4. A coil of power factor 0.7 is connected in series with a 90 microfarad capacitor. When connected to a 50 Hz power supply, the potential drop across the coil is equal to the potential drop across the capacitor. Find the resistance of the coil. 20

5. (a) Explain the comparison between acceptor circuit and rejector circuit in a.c. system. 10

   (b) Draw the wave diagram and phasor diagram to illustrate the relationship between V and I in case of

   (i) RL series circuit

   (ii) RC series circuit and

   (iii) RLC series circuit. 10

Section–D

6. A 3 phase 440V, 50 Hz, AC symmetrical supply is connected to a star connected balanced load consisting of 100 ohm resistor in each branch. Find the line current and power absorbed by the circuit. Also draw the phasor diagram indicating line and phase voltages and currents 20

https://www.mdupapers.com
https://www
http://www.haryanapapers.com

7. Explain the purpose of performing open circuit test and short circuit test on single phase transformer and how short circuit test is performed ? Give the reasons why short circuit test is performed only on high voltage side of the transformer. 20

Section–E

8. (a) Why Synchronous motor is not self starting ? Explain the starting methods of Synchronous motor. 10

   (b) Can an induction motor run at synchronous speed ? Explain. 10

9. (a) Explain the process of building up of e.m.f. in self excited d.c. generator. 10

   (b) Explain the basic difference between moving iron type instruments and moving coil type instruments with the help of neat diagrams. 10

http://www.haryanapapers.com

https://www.mdupapers.com
https://www